Work Order ID 64821

Friday, December 17, 2010 8:03:28 AM

Item ID: D3657-1
Revision ID:
Item Name: Guide Tool
Start Date: 12/16/2010 **Start Qty:** 10.00
Required Date: 1/19/2011 **Req'd Qty:** 10.00
Reference:

Accept

Setup Start
Stop

Cust Item ID:
Customer:

Approvals: **Process Plan:** [illegible] **Date:** 20-12-17 **Tooling:** _____ **Date:** _____
QC: _____ **Date:** _____ **SPC (Y/N):** _____ **Date:** _____

Run Start
Stop

Sequence ID/ Work Center ID	Operation Description	Set Up/ Run Hours	Tool ID	Tool #	Plan Code	Accept Qty	Reject Qty	Reject Number	Insp. Stamp
Draw Nbr	**Revision Nbr**								
D3657	Rev A								
100		0.00							
Bandsaw	BAND SAW								
Jeaspa Bandsaw	**Memo** Cut blank 2.300 " long	0.00	JL 11/01/11			10			
110		0.00							
HAAS 1	HAAS CNC VERTICAL MACHINING #1					10			
HAAS CNC vertical machine #1	**Memo** 1- Mill as per Folio FA669Rev: AA & Dwg D3657 Rev: A ☐2-Deburr per dwg D3443	0.00	JL 11/01/17						
120	QC2- Inspect parts off machine FAI/FAIB	0.00							
QC									
Quality Control	**Memo**	0.00	JL 11/01/17			10			

Dart Aerospace Ltd

W/O:		WORK ORDER CHANGES					
DATE	STEP	PROCEDURE CHANGE	By	Date	Qty	Approval Chief Eng / Prod Mgr	Approval QC Inspector

Part No: _____ **PAR #:** _____ **Fault Category:** _____ **NCR:** Yes No **DQA:** _____ **Date:** _____

Resolution: _____ **Disposition:** _____ **QA: N/C Closed:** _____ **Date:** _____

NCR:		WORK ORDER NON-CONFORMANCE (NCR)						
DATE	STEP	Description of NC Section A	Corrective Action Section B			Verification Section C	Approval Chief Eng	Approval QC Inspector
			Initial Chief Eng	Action Description Chief Eng	Sign & Date			

NOTE: Date & initial all entries

Work Order ID 64821

Friday, December 17, 2010 8:03:28 AM

Item ID: D3657-1 **Accept** **Setup Start**

Pevision ID:

Item Name: Guide Tool **Stop**

Start Date: 12/16/2010 **Start Qty:** 10.00 **Cust Item ID:**

Required Date: 1/19/2011 **Req'd Qty:** 10.00 **Customer:**

Reference:

Approvals: **Process Plan:** _____ **Date:** _____ **Tooling:** _____ **Date:** _____ **Run Start**

QC: _____ **Date:** _____ **SPC (Y/N):** _____ **Date:** _____ **Stop**

Sequence ID/ Work Center ID	Operation Description	Set Up/ Run Hours	Tool ID	Tool #	Plan Code	Accept Qty	Reject Qty	Reject Number	Insp. Stamp
130	QC8- Inspect parts - second check	0.00							
QC	Memo	0.00	B.A 11/01/17			10	Ø		
Quality Control									
140	Chemical Conversion Coat per QSI005 4.1	0.00	M 11/01/17						
HandFinish	Memo	0.00				10	Ø		
Hand Finishing									
150	QC3- Inspect Part Finish	0.00							
QC	Memo	0.00				10	BL 11-01-17.		
Quality Control									

Dart Aerospace Ltd

W/O:		WORK ORDER CHANGES					
DATE	STEP	PROCEDURE CHANGE	By	Date	Qty	Approval Chief Eng / Prod Mgr	Approval QC Inspector

Part No: _____ **PAR #:** _____ **Fault Category:** _____ **NCR:** Yes No **DQA:** _____ **Date:** _____

Resolution: _____ **Disposition:** _____ **QA: N/C Closed:** _____ **Date:** _____

NCR:		WORK ORDER NON-CONFORMANCE (NCR)						
DATE	STEP	Description of NC Section A	Corrective Action Section B			Verification Section C	Approval Chief Eng	Approval QC Inspector
			Initial Chief Eng	Action Description Chief Eng	Sign & Date			

NOTE: Date & initial all entries

H:\fFORMS\Quality Assurance\approved QA\NCRWO RevE

Work Order ID 64821

Friday, December 17, 2010 8:03:28 AM

Item ID: D3657-1 **Accept** **Setup Start**

Revision ID: **Stop**

Item Name: Guide Tool

Start Date: 12/16/2010 **Start Qty:** 10.00 **Cust Item ID:**

Required Date: 1/19/2011 **Req'd Qty:** 10.00 **Customer:**

Reference:

Run Start

Approvals: **Process Plan:** _____ **Date:** _____ **Tooling:** _____ **Date:** _____

Stop

QC: _____ **Date:** _____ **SPC (Y/N):** _____ **Date:** _____

Sequence ID/ Work Center ID	Operation Description	Set Up/ Run Hours	Tool ID	Tool #	Plan Code	Accept Qty	Reject Qty	Reject Number	Insp. Stamp
160	Identify as per dwg & Stock Location: 244A	0.00				11/1/18	SJ	102	
Packaging	**Memo**	0.00							
Packaging									
170	QC21- Final Inspection - Work Order Release	0.00						11/01/18	
QC	**Memo**	0.00							
Quality Control									

MF

11-01-18

Dart Aerospace Ltd

W/O:		WORK ORDER CHANGES					
DATE	STEP	PROCEDURE CHANGE	By	Date	Qty	Approval Chief Eng / Prod Mgr	Approval QC Inspector

Part No: _____ **PAR #:** _____ **Fault Category:** _____ **NCR:** Yes No **DQA:** _____ **Date:** _____

Resolution: _____ **Disposition:** _____ **QA: N/C Closed:** _____ **Date:** _____

NCR:		WORK ORDER NON-CONFORMANCE (NCR)						
DATE	STEP	Description of NC Section A	Corrective Action Section B			Verification Section C	Approval Chief Eng	Approval QC Inspector
			Initial Chief Eng	Action Description Chief Eng	Sign & Date			

NOTE: Date & initial all entries

H:\fFORMS\Quality Assurance\approved QA\NCRWO RevE

Picklist Print

Friday, December 17, 2010 8:03:32 AM

Work Order ID: 64821

Parent Item: D3657-1

Parent Item Name: Guide Tool

Start Date: 12/16/2010 **Required Date:** 1/19/2011

Start Qty: 10.00 **Required Qty:** 10.00

Comments: IPP Rev:A New Issue 07-01-15 JLM

Component Item ID/ Item Name	Replacement Item ID	Mfg/ Purch	Bin Item	Primary Location	Last Location	Route Seq ID	Unit of Measure	Qty on Hand	Qty per Kit	Total Qty	Qty Issued	Date Issued	Status
M6061T6B0.500X01.000		Purchased	No			100	f	21.5910	0.1916	2.016842			

6061-T6 Bar .500 x 1.00

SL 11/01/11

Location	Loc Qty	Loc Code
MAT01	21.591	
107436	21.591	

2.2

Dart Aerospace Ltd

W/O:		WORK ORDER CHANGES					
DATE	STEP	PROCEDURE CHANGE	By	Date	Qty	Approval Chief Eng / Prod Mgr	Approval QC Inspector

Part No: _____ **PAR #:** _____ **Fault Category:** _____ **NCR:** Yes No **DQA:** _____ **Date:** _____

Resolution: _____ **Disposition:** _____ **QA: N/C Closed:** _____ **Date:** _____

NCR:		WORK ORDER NON-CONFORMANCE (NCR)						
DATE	STEP	Description of NC Section A	Corrective Action Section B			Verification Section C	Approval Chief Eng	Approval QC Inspector
			Initial Chief Eng	Action Description Chief Eng	Sign & Date			

NOTE: Date & initial all entries

H:\fFORMS\Quality Assurance\approved QA\NCRWO RevE

DART AEROSPACE LTD	Work Order:	64821
Description: Guide Tool	Part Number:	D3657-1
Inspection Dwg: D3657 **Rev:** A		Page 1 of 1

FIRST ARTICLE INSPECTION CHECKLIST

[X] First Article [ ] Prototype

Drawing Dimension	Tolerance	Actual Dimension	Accept	Reject	Method of Inspection	Comments
Ø0.620	+0.008/-0.001	.622	✓		Vern X3	
0.50	+/-0.030	.497	✓			
0.315	+/-0.010	.316	✓			
2.00	+/-0.030	2.002	✓			
1.5	+/-0.030	1.500	✓			
0.50	+/-0.030	.496	✓			
0.35	+/-0.030	.359	✓			
R0.13	+/-0.030	.130	✓			
15°	+/-0.5°	15°	✓			

Measured by:	JL	Audited by:	H.A	Prototype Approval:	N/A
Date:	11/01/17	Date:	11/01/17	Date:	N/A

Rev	Date	Change	Revised by	Approved
A	09.06.22	New Issue	KJ	

Dart Aerospace Ltd

W/O:		WORK ORDER CHANGES					
DATE	STEP	PROCEDURE CHANGE	By	Date	Qty	Approval Chief Eng / Prod Mgr	Approval QC Inspector

Part No: _____ **PAR #:** _____ **Fault Category:** _____ **NCR:** Yes No **DQA:** _____ **Date:** _____

Resolution: _____ **Disposition:** _____ **QA: N/C Closed:** _____ **Date:** _____

NCR:		WORK ORDER NON-CONFORMANCE (NCR)						
DATE	STEP	Description of NC Section A	Corrective Action Section B			Verification Section C	Approval Chief Eng	Approval QC Inspector
			Initial Chief Eng	Action Description Chief Eng	Sign & Date			

NOTE: Date & initial all entries

H:\FORMS\Quality Assurance\approved QA\NCRWO RevE

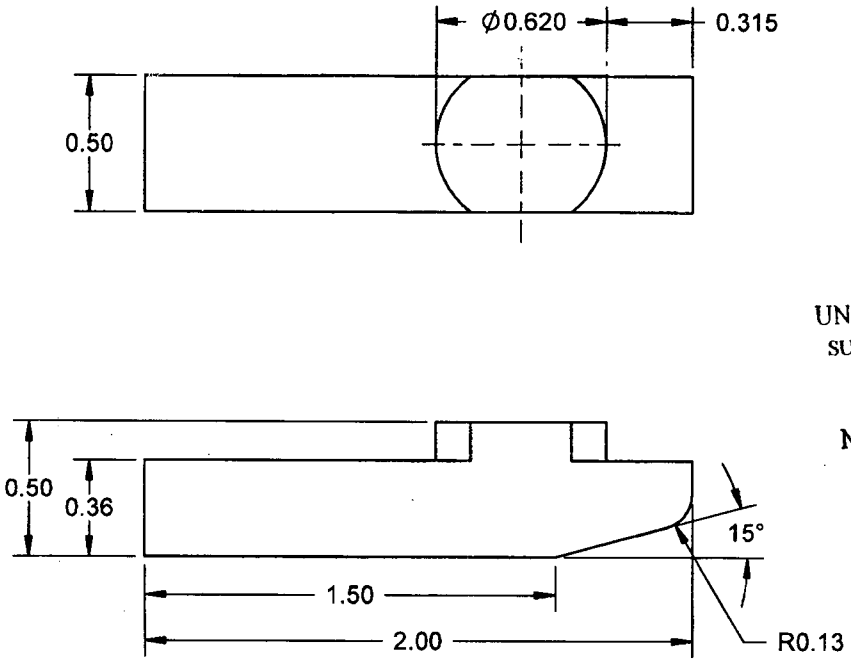

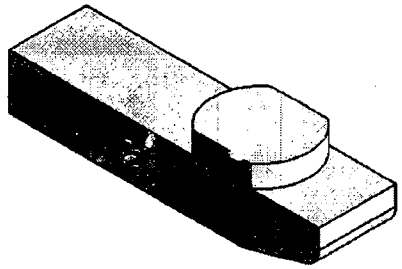

SHOP COPY
RETURN TO
ENGINEERING
UNCONTROLLED COPY
SUBJECT TO AMENDMENT
WITHOUT NOTICE
WORK ORDER
NO. 64821
10-12-17

RELEASED
07.09.07

D3657-1 GUIDE TOOL
(WAS GENEVA P/N G12170)

NOTES:
1) MATERIAL: 6061-T6 (OR T651/-T6510/-T6511/-T62) ALUMINUM BAR PER QQ-A-225/8 OR QQ-A-200/8 OR AMS 4117/4128/4115/4116/4160) (REF DART SPEC M6061T6B)
2) FINISH: CHEMICAL CONVERSION COAT PER DART QSI 005 4.1
3) TOLERANCES: PER DART QSI 018 UNLESS OTHERWISE NOTED
4) UNITS: INCHES UNLESS OTHERWISE NOTED
5) BREAK SHARP EDGES: 0.005 TO 0.010 MAX
6) IDENTIFICATION: IDENTIFY WITH DART P/N "D3657-1" USING FINE POINT PERMANENT INK MARKER
7) WEIGHT: 0.04 lbs

REV.	DESCRIPTION	BY	DATE
A	NEW ISSUE; REPLACES G12170	LE	07.07.27

DESIGN	CLB	DART AEROSPACE USA, INC. PORT HADLOCK, WA	
DRAWN	LE		
CHECKED		DRAWING NO. D3657	REV. A
MFG. APPR.			SHEET 1 OF 1
APPROVED		TITLE GUIDE TOOL	SCALE 3:2
DE APPR.			
DATE	07.07.27		

COPYRIGHT © 2007 BY DART AEROSPACE USA, INC.
THIS DOCUMENT IS PRIVATE AND CONFIDENTIAL AND IS SUPPLIED ON THE EXPRESS CONDITION THAT IT IS NOT TO BE USED FOR ANY PURPOSE OR COPIED OR COMMUNICATED TO ANY OTHER PERSON WITHOUT WRITTEN PERMISSION FROM DART AEROSPACE USA, INC.

Dart Aerospace Ltd

W/O:		WORK ORDER CHANGES					
DATE	STEP	PROCEDURE CHANGE	By	Date	Qty	Approval Chief Eng / Prod Mgr	Approval QC Inspector

Part No: _____ **PAR #:** _____ **Fault Category:** _____ **NCR:** Yes No **DQA:** _____ **Date:** _____

Resolution: _____ **Disposition:** _____ **QA: N/C Closed:** _____ **Date:** _____

NCR:		WORK ORDER NON-CONFORMANCE (NCR)						
DATE	STEP	Description of NC Section A	Corrective Action Section B			Verification Section C	Approval Chief Eng	Approval QC Inspector
			Initial Chief Eng	Action Description Chief Eng	Sign & Date			

NOTE: Date & initial all entries

H:\fFORMS\Quality Assurance\approved QA\NCRWO RevE